MATTRESS
Installation Manual

PaveDrain® MATTRESS Installation Manual

Table of Contents

The Confidential Information to be disclosed can be described as and includes:

Invention description(s), technical and business information relating to proprietary ideas and inventions, ideas, patentable ideas, trade secrets, drawings and/or illustrations, patent searches, existing and/or contemplated products and services, research and development, production, costs, profit and margin information, finances and financial projections, customers, clients, marketing, and current or future business plans and models, regardless of whether such information is designated as "Confidential Information" at the time of its disclosure.

2. The Recipient agrees not to disclose the confidential information obtained from the discloser to anyone unless required to do so by law.

3. This Agreement states the entire agreement between the parties concerning the disclosure of Confidential Information. Any addition or modification to this Agreement must be made in writing and signed by the parties.

4. If any of the provisions of this Agreement are found to be unenforceable, the remainder shall be enforced as fully as possible and the unenforceable provision(s) shall be deemed modified to the limited extent required to permit enforcement of the Agreement as a whole.

Section 1

Base Preparation

Open Graded Base & Bedding Course Aggregate: If more than 6" of base stone is required, only the top 4-6" shall be Typ. AASHTO/ASTM #57 Stone bedding layer ***(clean, angular on all sides, no fines)***. The final depth to be determined by Engineer. This layer is used as a leveling/bedding course directly beneath the blocks (see Fig. 1). Additional stone depth should consist of either AASHTO/ASTM #2 or #3 stone ***(clean, angular on all sides, no fines)***. The final depth to be determined by Engineer.

Edge Restraint: Defining the edges of the PaveDrain system is important (see examples on page 12). Concrete curbing is the most commonly used material. However, using other materials such as plastic strip edging (commonly used in typical pavers) is not advisable.

Separation Fabric: A high strength **woven** monofilament or multi-filament geotextile is highly recommended to be installed as a base reinforcement and separation layer between the aggregate storage bedding layer (depth to be determined) an the native sub-grade. Please check with your local PaveDrain representative to determine the appropriate geosynthetic required. The geosynthetic is a key component of the PaveDrain system. Negating its use could be detrimental to the function, performance and life cycle of the PaveDrain system. The "vertical walls" of your prepared area should also be lined with an appropriate geosynthetic to prevent soil and aggregate migration (see Fig. 2, 3 and 4).

Fig. 1

Fig. 2

LAYOUT & PREPARATION

If individual units are to be installed, they will arrive wrapped on pallets. Pallets will weigh approximately 4,000 lbs or less. If the PaveDrain system is installed in mattress form, a mat layout will be provided (see below) by PaveDrain, LLC or its representatives. Mat weights and sizes will be determined in advance of shipment. Each mat will be pre-fabricated at the manufacturing facility and delivered to the site ready to be installed.

NOTE: Before digging, always call your local utility companies to locate any underground utilities.

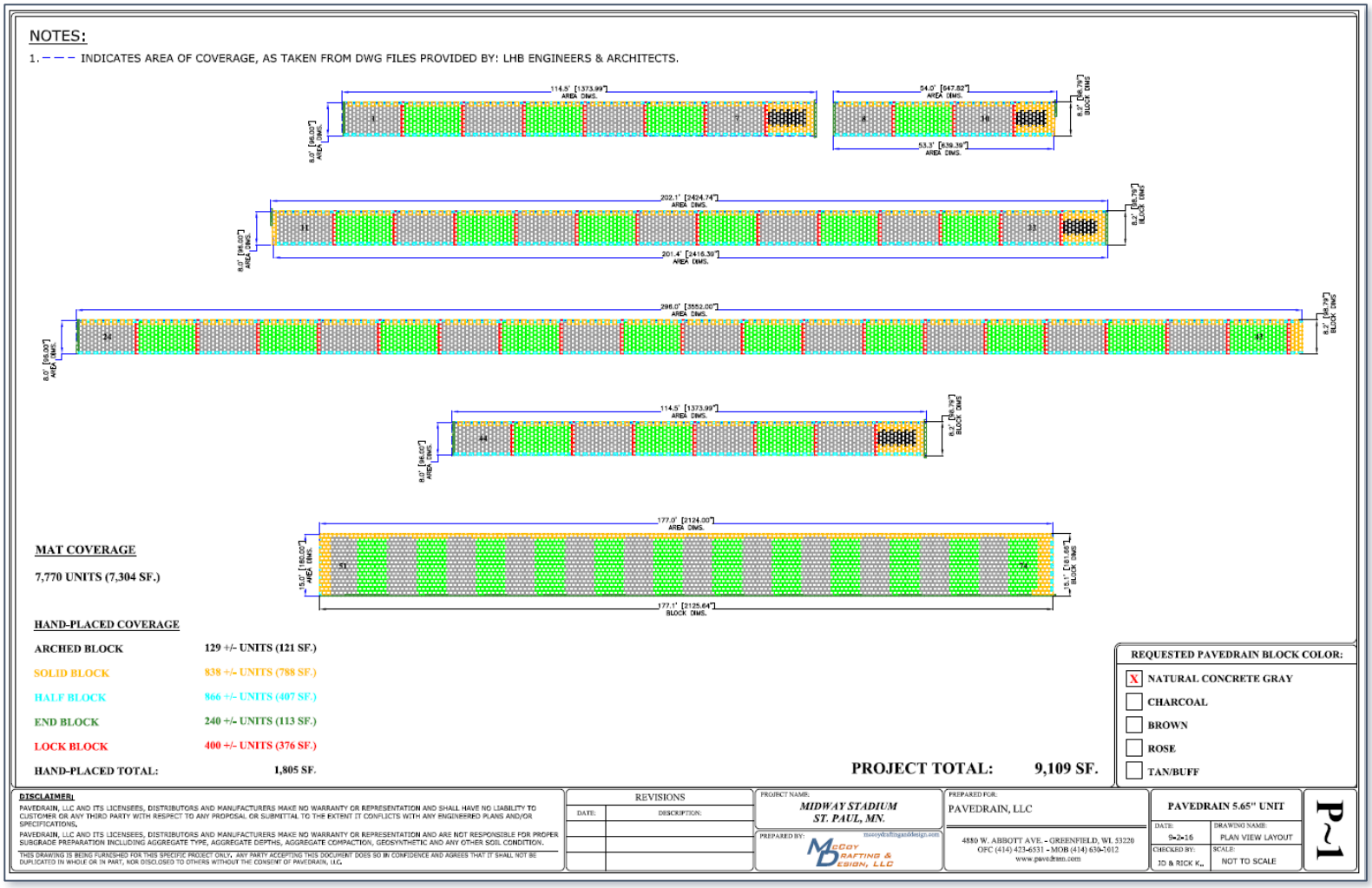

PREPARE SUBGRADE SOILS

For best results, the finished subgrade should be flat, smooth and stable. A California Bearing Ratio (CBR) should be established well in advance of the installation. The appropriate geosynthetic is critical and should prevent rutting. If the subgrade appears weak or damp following the installation of the appropriate geosynthetic, contact a professional geotechnical engineer or local PaveDrain representative for further assistance.

Fig. 3

Fig. 4

PREPARATION OF OPEN GRADED BASE

The depth of stone should be determined well in advance of the installation of the PaveDrain system by the engineer of record, based on the CBR and storm water storage requirements.

Open graded base materials **must** be free of fines. Take care not to track soil onto the geosynthetic or allow sediment to wash into the excavation during construction.

Typ. #57 stone is recommended as the bedding layer of stone (see description below). Place the stone on the appropriate geosynthetic in 4-6" lifts and compact with a vibratory roller. **The use of a vibratory plate compactor in both directions is best for final compaction of the bedding layer of AASHTO #57 stone that will be in direct contact with the bottom of the PaveDrain units unless the optional geogrid is used** (see FIG. 5 on next page)**.** There should be **no visible movement of the material once compacted and the base should be smooth** when completed.

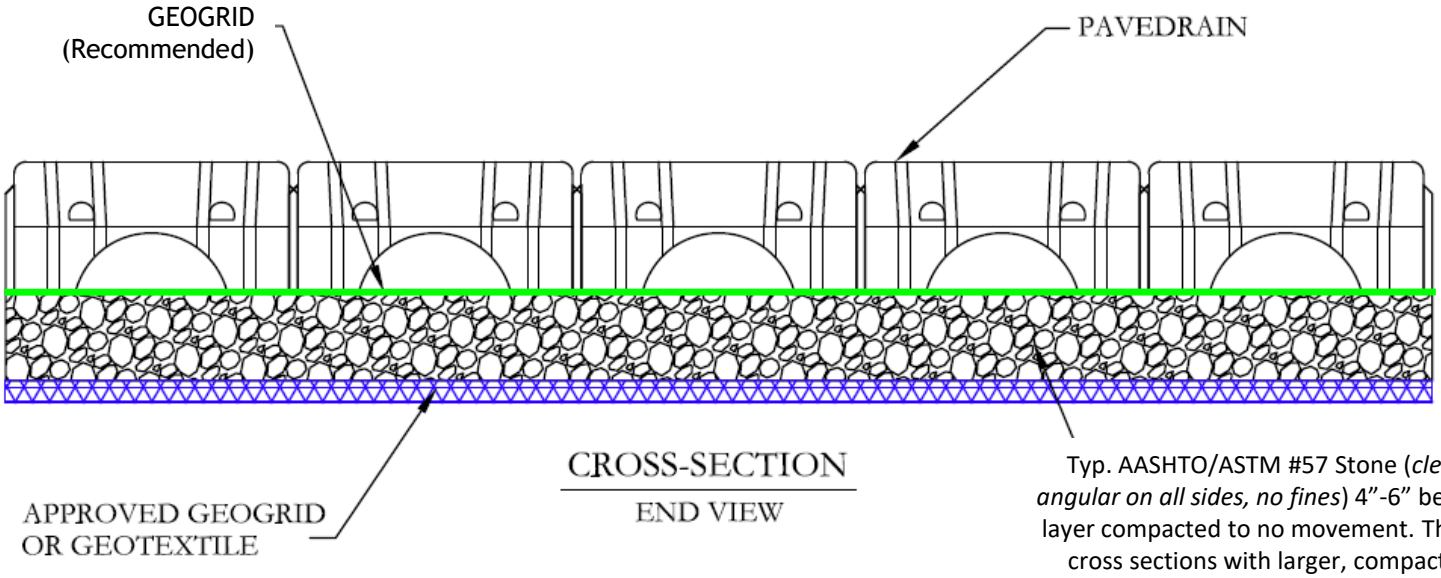

Typ. AASHTO/ASTM #57 Stone (*clean, angular on all sides, no fines*) 4"-6" bedding layer compacted to no movement. Thicker cross sections with larger, compacted angular stone on all sides TBD by engineer.

REMEMBER: Subgrade preparation is **CRITICAL!** The PaveDrain system will mirror any grade changes or discrepancies made with the subgrade.

Fig. 5

If it is determined by the engineer of record that a rock depth in excess of 12" is required, then the cross-section below should be followed.

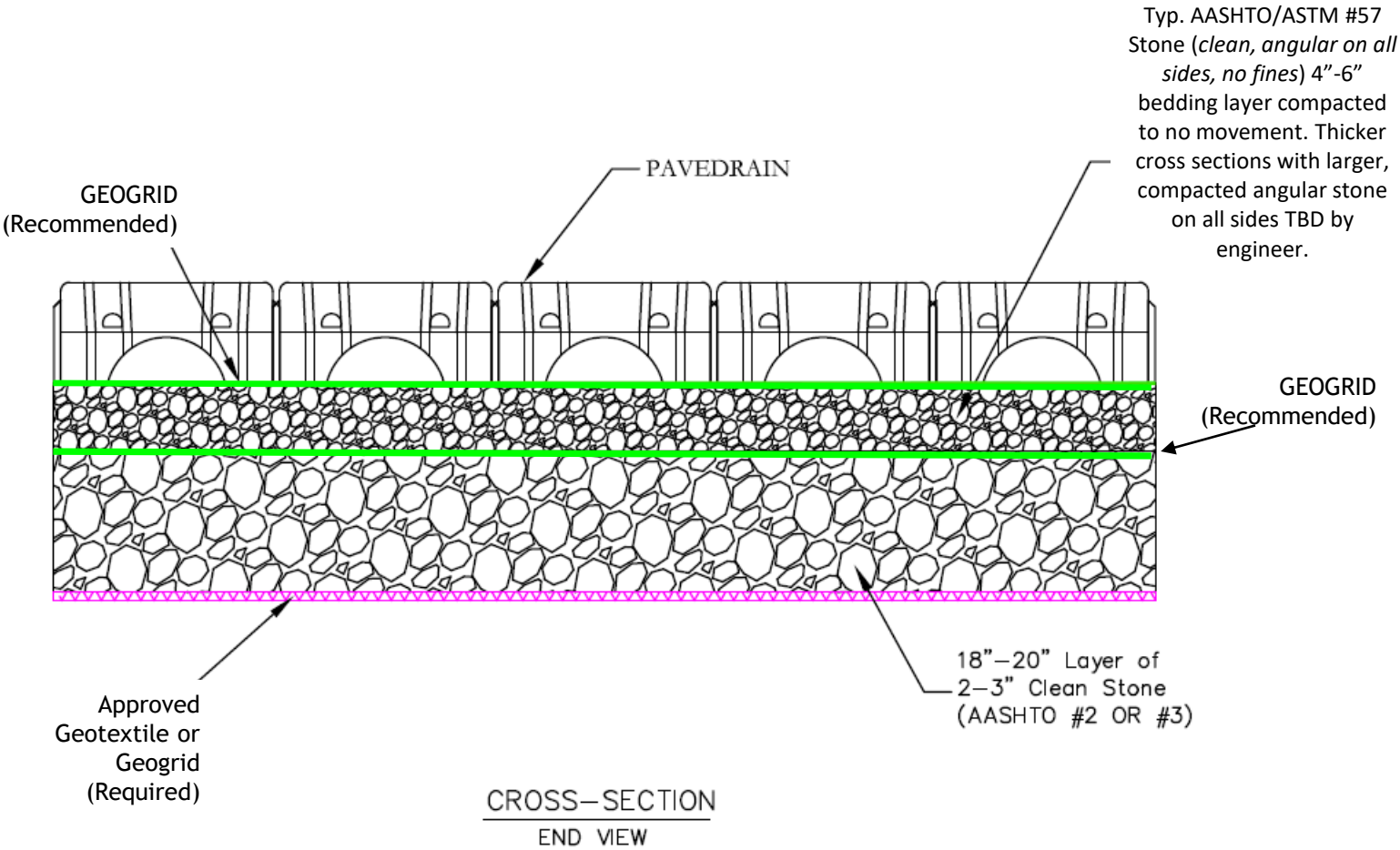

CRUCIAL TOOLS

Professional survey equipment is always recommended; other suggested materials are pipe lasers (if available), marking paint, tape measure, chalk line, block markers/crayons, string line, survey stakes, rubber mallets, 4′-5′ pry bars, 4 ½″ angle grinder with concrete cutting blade, masonry saw (wet/dry) with diamond cutting blade, spade and flat shovel, hard-tooth garden rake, Geosynthetic, "peanut" or double roller and plate compactor.

*****BUMP BAR***** – For Mattress Installation

See Step #5 in the Mattress Installation section for further details and Fig. 11 for a photo of the bar. Made from 5″ x 5″ angle iron that is roughly 7-8′ in length.

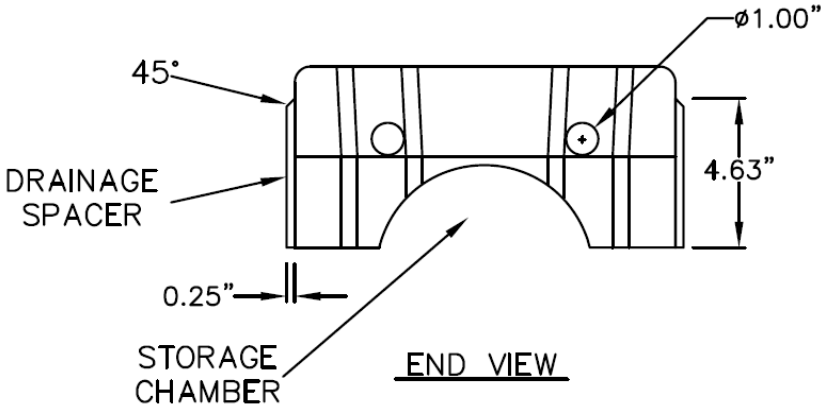

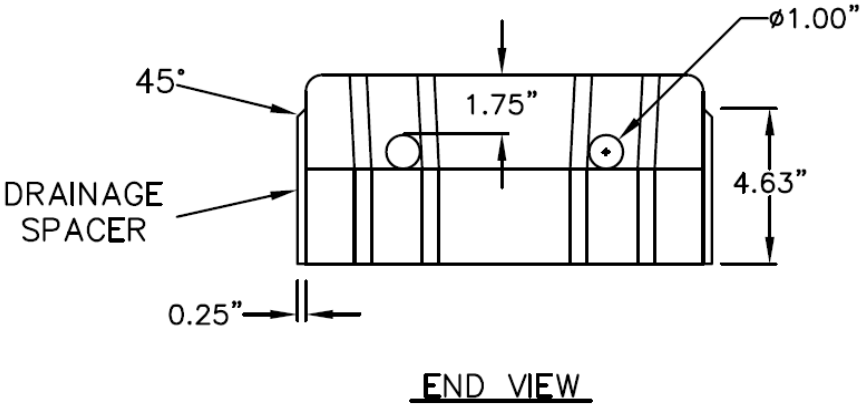

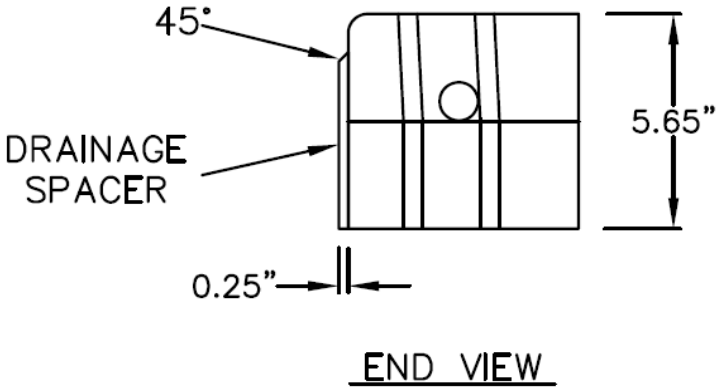

Section 2

Mattress Installation

Step #1: If existing hardscapes are to remain (i.e. asphalt or concrete) the prepared area needs to be 1′ (one foot) larger than the mats. Mats to be installed are 16.3′. Prepared area is 17.4′ (see Fig. 6).

Fig. 6

Step #2: ***Base preparation is CRITICAL!!!***

Undulations and grade changes in the rock base will be reflected in the PaveDrain system. A plate compactor may be the best way to level and flatten the base rock before and during installation (see Fig. 5 on page 6 in “Base Preparation” section and 7 & 8 below).

Fig. 7

Fig. 8

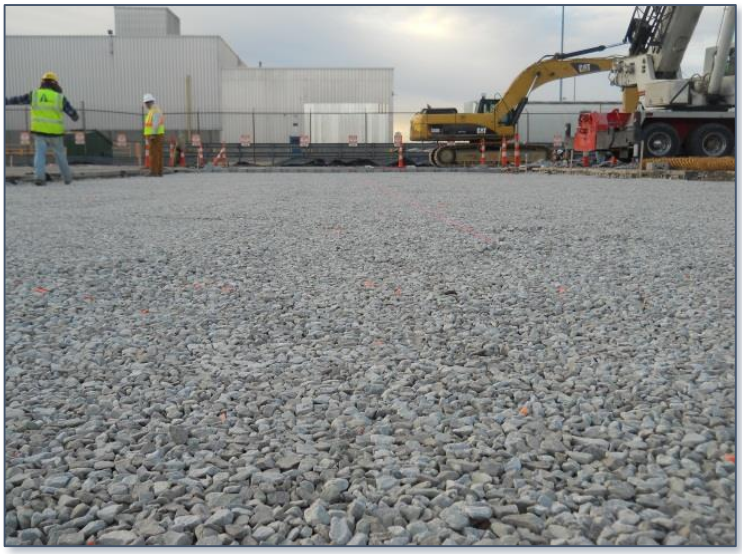

Step #3: ***DO NOT UNDERESTIMATE*** the sag in the mat. The longer the mat the more the mat will sag and the higher you will need to pick the mat up in order to get it off of the truck (see Fig. 9).

Fig. 9

PaveDrain® Mats were 7.14' x 32.2' and weighed 11,500 lbs.

The Spreader bar weighed an additional 3,500 lbs.

NOTE: ***PaveDrain's Mat Installation Spreader Bar is available for rent. It will arrive (ready to use) on the first truckload of mats. PaveDrain, LLC can also supply drawings to anyone who would like to fabricate their own spreader bar.***

Step #4: "Zippering" the mats into place can be facilitated with pry bars (see Fig. 10).

Fig. 10

Step #5: "Bumping" the mats to create a secure fit is highly recommended. The fabrication of a "bump bar" (see Fig. 11) will help close any unwanted gaps that are larger than the required ¼" established by the unit spacer. The bump bar is made for 5" x 5" angle iron and is roughly 8' long. Adding handles (see Fig. 11) will help with moving the bar from mat to mat. Gaps within the mattress area can be bumped from all sides to achieve the desired tightness (see Fig. 12 and 13).

Fig. 11

Fig. 12

Fig. 13

The BUMP BAR can be ***PULLED*** with the bucket to help adjust the gap.

The BUMP BAR can be ***PUSHED*** with the bucket to help adjust the gap.

Step #6: If the Submittal pack requires the use of PaveDrain Lock Block™ and/or Lock Block rows, you will need a 4 ½" angle grinder with a concrete cutting blade (**only if units are not already notched)** (see Fig. 14 & 15).

Fig. 14

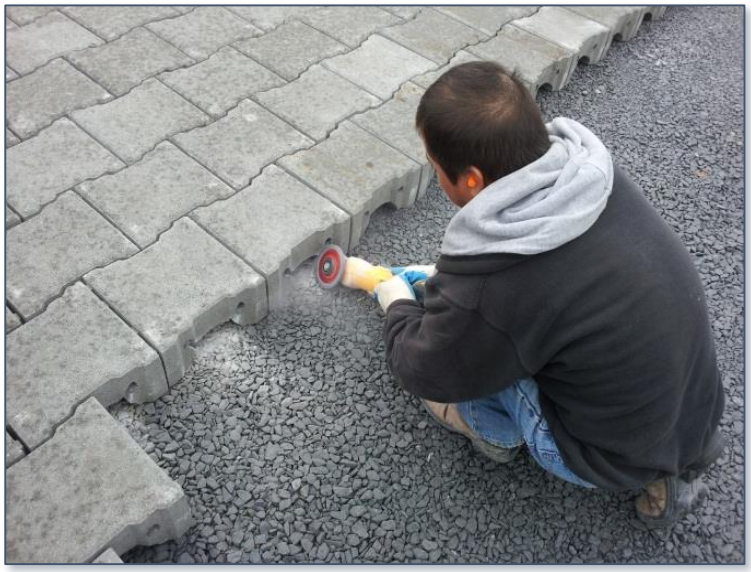

Fig. 15

Step #7: Once the mats have been zippered together, if there are any differential heights between the mats, they can be vibrated into place by putting a non-woven geotextile on top of the blocks and then running a plate compactor over the zippered seam (see Fig. 16). A non-vibrating roller can also be utilized (see Fig. 19 & 20 on page 16).

Fig. 16

Step #8: The PaveDrain mats can be tailored to accommodate a variety of obstacles within the working area such as: water meter openings, man-holes, existing curb drains, light posts, sign posts and existing concrete structures. PaveDrain® mats can be tailored by removing individual units within the mat, before the mat is installed ***OR*** after the mat is installed (see Fig. 17 & 18 on the next page).

Fig. 17

Fig. 18

Section 3

Edge Restraints

Edge restraints are used to delineate and confine a PaveDrain system and are highly recommended whenever vehicular loads are present. There are many acceptable options for edge restraints with the PaveDrain System. The detail below and on the following page shows the most common methods, utilizing a poured-in-place concrete flush curb. If you wish to consider other alternates, please contact your local sales representative for support.

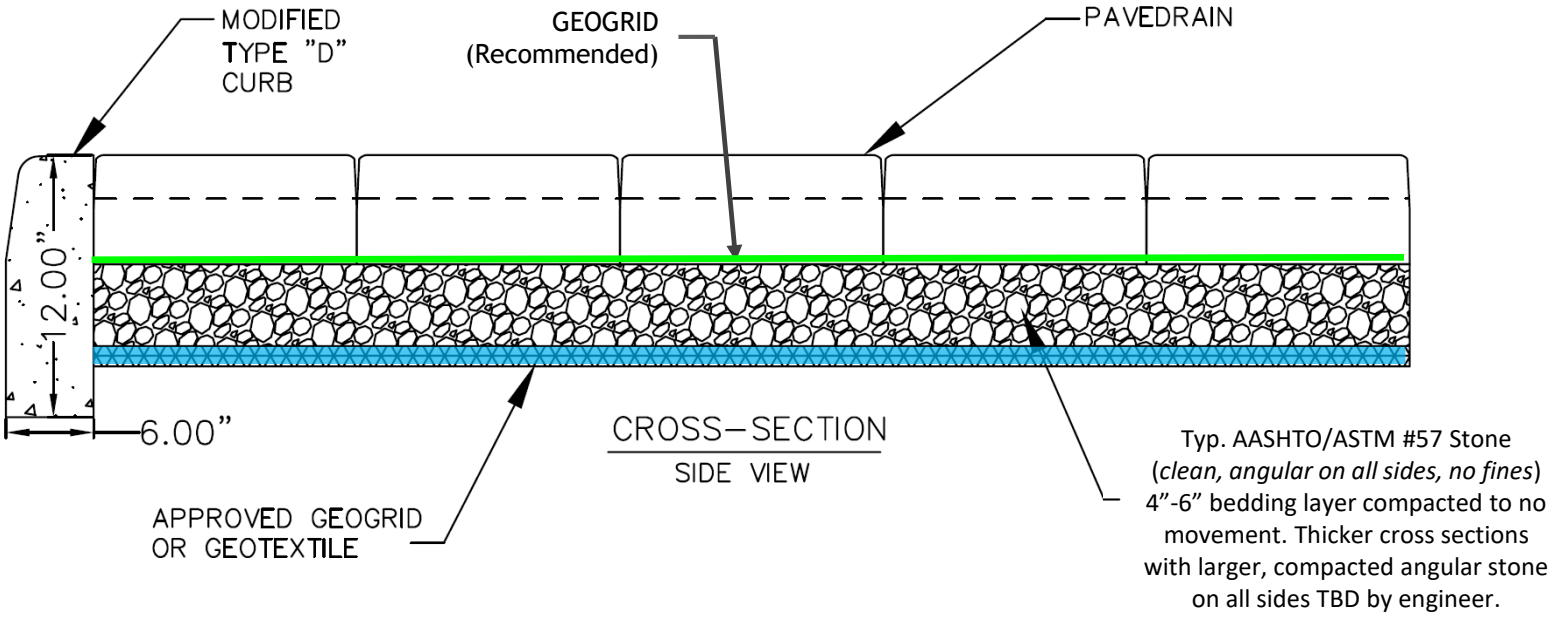

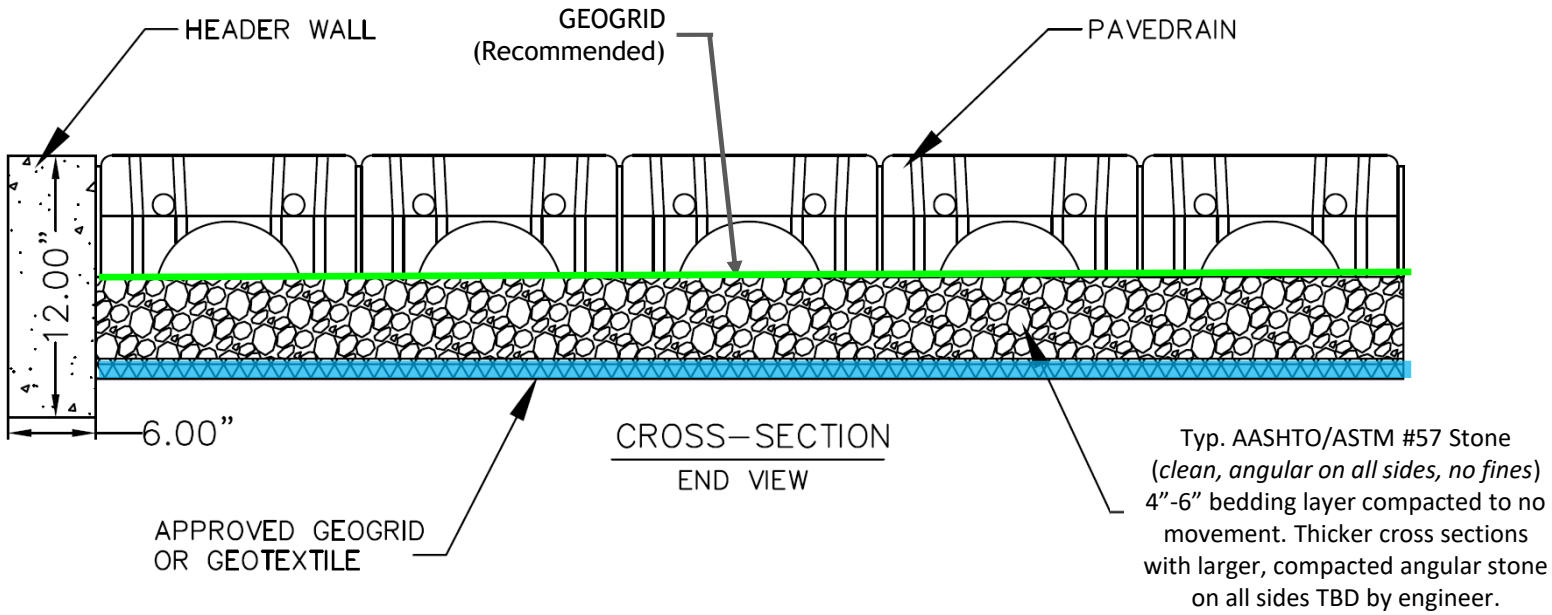

The **Two Stage Curb** detail below is an edge restraint solution that can be used when the PaveDrain System terminates on a curve or radius. The Two Stage Curb detail eliminates the need for field cutting of the PaveDrain blocks to match the required curve or radius.

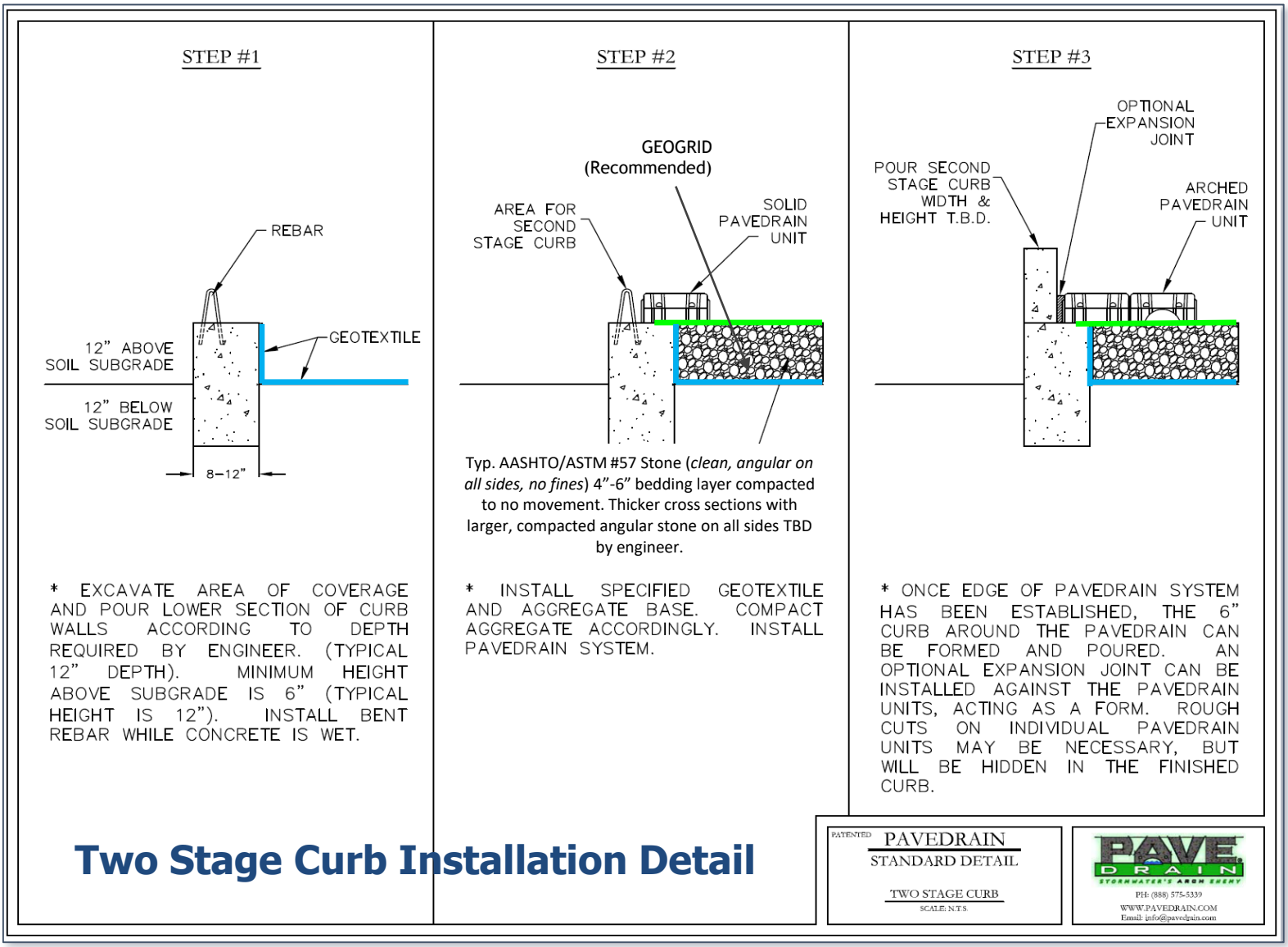

1. Minimal cutting of the PaveDrain blocks.
2. Compacted rock is brought to proper height.
3. Exposed rebar is for securing poured curb after the block are installed.

Two Stage Curb Photos

Curb is poured ***ON TOP*** of the PaveDrain.

Completed Two Stage Curbs

Section 4

PaveDrain End Block

The **PaveDrain End Block** is designed to give a smooth transition between the PaveDrain system and the existing surfaces. Installation of the End Block can be done in conjunction with all 3 types of installation methods used on the PaveDrain system.

Conventional materials, such as rock, ½" expansion board, asphalt or concrete, are easily placed directly between the PaveDrain® End Block and the existing structure.

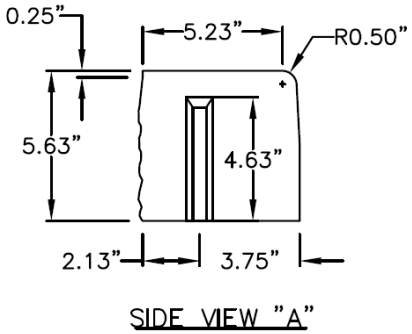

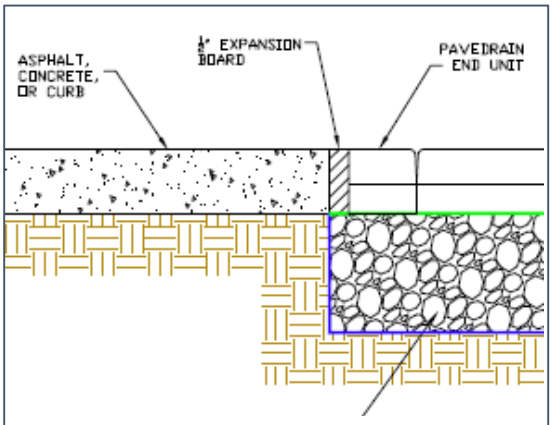

Typ. AASHTO/ASTM #57 Stone (*clean, angular on all sides, no fines*) 4"-6" bedding layer compacted to no movement. Thicker cross sections with larger, compacted angular stone on all sides TBD by engineer.

Section 5

Finishing the PaveDrain System

As always, the joints within the PaveDrain system are designed to be left open. Placing sand or small rock chips within the open joints is not recommended. Following the installation of the PaveDrain system, slight unevenness between the individual blocks may be evident. To resolve this, a (non-vibrating) double-drum roller or paver roller may be run over the top (see Fig. 19 & 20 below).

No individual PaveDrain unit shall protrude more than one-quarter (1/4) inch within the plane of the final placed blocks. No gap between the individual PaveDrain blocks or the surrounding Edge Restraint shall exceed one-half (1/2) inch.

Fig. 19

Fig. 20